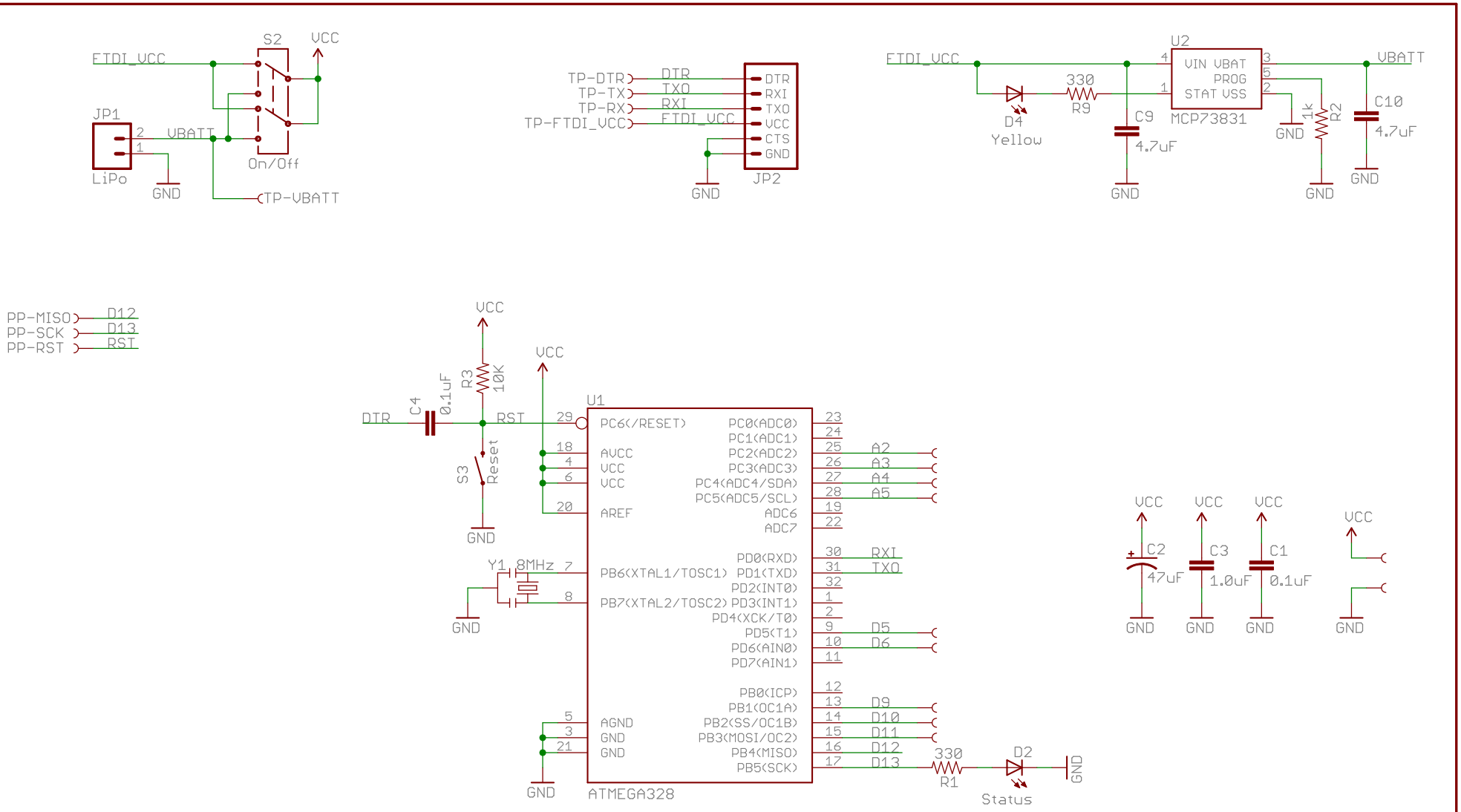

LilyPad - MainBoard Simple

TITLE: LilyPad-Simple-v25	LillyPad
Document Number: Spark Fun Electronics	REV:
Date: 12/29/2010 9:53:36 AM	Sheet: 1/1

Released under the Creative Commons Attribution Share-Alike 3.0 License
http://creativecommons.org/licenses/by-sa/3.0

Designed by:
L. Buechley
N. Seidle