Battery Holder

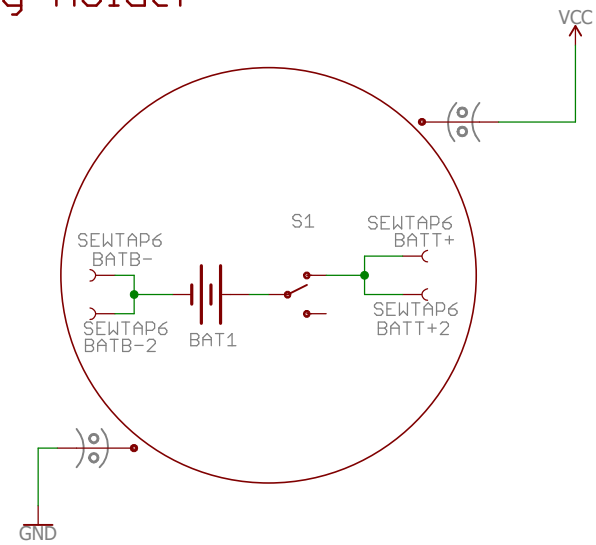

Button/Switch

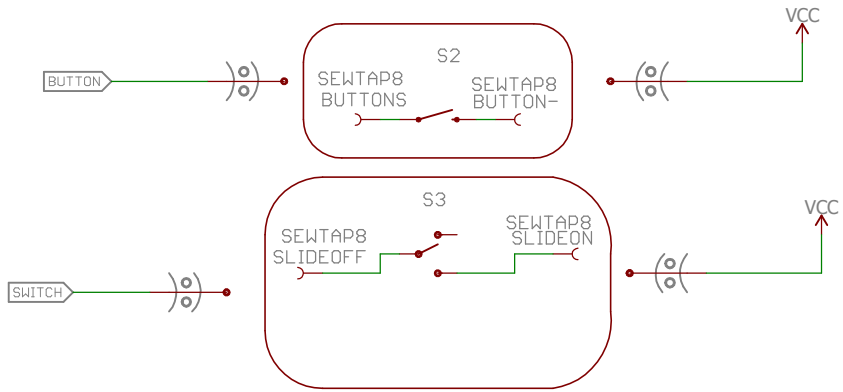

LEDs

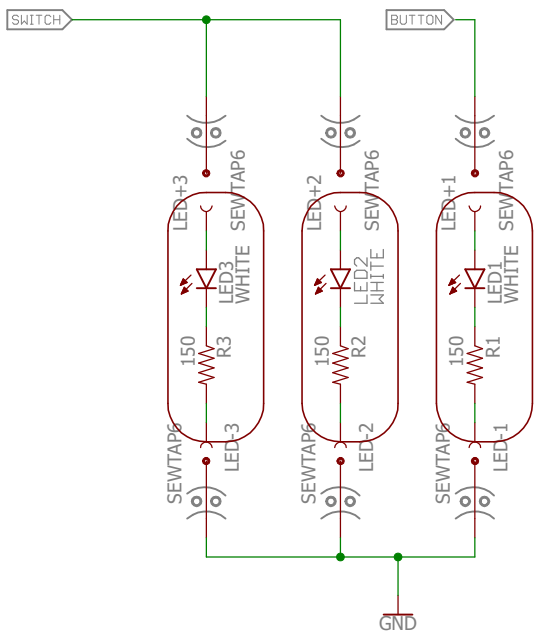

Special Instructions

sparkfun open hardware

Released under the Creative Commons
Attribution Share-Alike 4.0 License
https://creativecommons.org/licenses/by-sa/4.0/

TITLE: LilyPad-E-Sewing-Kit_v15

Design by: L. Buechley, N. Seidle, P. Lewis, T. Klopfenstein
Revision By: Elias Santistevan

REV: v15

Date: 12/7/2017 3:59 PM

Sheet: 1/1